Performance Evaluation of MEMS Based Capacitive Pressure Sensor for Hearing Aid Application

Apoorva Dwivedi[1], Gargi Khanna[2]

Department of Electronics and Communication Engineering
National Institute of Technology Hamirpur-177005, H.P.

Abstract: *This paper presents a simulative analysis of capacitive pressure sensor for hearing aid application. The sensor responds to the sound signal in the range of 0 to 200 Pa in terms of capacitance. In this paper performance of sensor with respect to different shapes, structures and materials of diaphragm are investigated. The sensor yields a capacitive sensitivity of* $5.9445*10^{-6}$ *1/Pa for Polysilicon diaphragm and* $8.2311*10^{-6}$ *1/Pa for Polyimide diaphragm respectively. It is found that capacitive sensitivity improved by 1.38 times by using Polyimide as diaphragm material. It is observed that 4 Slotted Square diaphragm shows best performance in terms of capacitive sensitivity.*

Keywords: *CMOS, COMSOL Multiphysics, MCM-MEMS Capacitive Microphone, Readout Circuitry.*

1. Introduction

The high burden of deafness globally and in India is largely preventable and avoidable. According to the 2014 estimates of WHO, 278 million people have disabling hearing impairment. The prevalence of deafness in Southeast Asia ranges from 4.6% to 8.8%. In India, 63 million people (6.3%) suffer from significant auditory loss. Nationwide disability surveys have estimated hearing loss to be the second most common cause of disability [1].

The hearing aids [2] available in the market have the problem of directionality, sensitivity and audio range. Also the users have difficulty in hearing when driving, talking over the phone and difficulty distinguishing background noise. There are many types of hearing aids like Behind the Ear (BTE), In the Ear (ITE), and In the Canal (ITC) and completely in the Canal (CIC). A new type of hearing aid that has overcome severe hearing loss is the Cochlear Implant [3] hearing aid. There are also different types of hearing losses. Conductive hearing loss refers to a decrease in sound caused by a problem in the outer or middle ear and is usually treated by medical or surgical intervention. The other type of hearing aid is sensorineural loss which refers to the problem located in the inner ear or along the pathway between the inner ear and the brain. This type is almost not treatable so the focus of researchers is to design MEMS based hearing aid devices which can overcome this loss to some extent.

The microphones that are commercially available in market can be classified into different categories depending on their principle of operation. A capacitive microphone [4] is the one that calculates the change in acoustic pressure by change in capacitance; a piezoelectric microphone has the ability to produce voltage when subjected to pressure. In a piezoresistive microphone the resistance of the material changes with change in applied voltage or pressure.

This paper presents a MCM which uses different materials like Polysilicon, and Polyimide as the material for the diaphragm respectively. Gold is used for back plate and the dielectric is air. The paper is divided into mainly into 5 sections. The second section describes the principle of operation as well as the structure of MCM. The third section gives a brief overview of the usage of COMSOL Multiphysics and the fourth section gives the details of the different measurements and analysis carried out in the work. The fifth section gives the final conclusion.

2. MEMS Capacitive Microphone

The MEMS capacitive microphone has gained importance in the last decade or so because of its ease

to fabricate. It basically works on the principle of operation of change in capacitance with the applied voltage or pressure [5]. The basic structure of the MEMS capacitive microphone analysed in this paper is shown in figure 1.

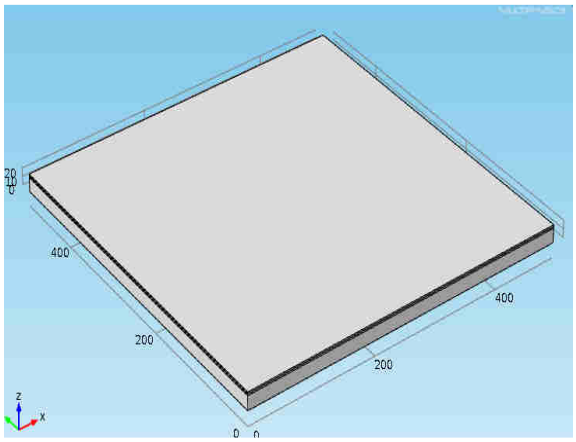

Fig. 1 Structure of MEMS Capacitive Pressure Sensor

It is made up of three layers. The bottom plate is the gold electrode and it is required to give the input to the readout circuitry. On top of this electrode the diaphragm is fabricated. In this paper we have compared the performance of sensor two different diaphragm materials. Firstly we have used Polysilicon as the diaphragm material and secondly we have used Polyimide as the diaphragm material. The backplate makes up the fixed plate of the variable capacitor of MCM and the diaphragm makes up the variable plate. Due to air pressure the diaphragm deflates and hence the distance between the two plates changes and hence the capacitance varies. This change in capacitance is readout using the gold electrode.

Table 1. Dimensions of the Capacitive Sensor

Structure name	Dimensions (µm)
Diaphragm width	500
Diaphragm length	500
Diaphragm thickness	2
Air gap length	500
Air gap width	500
Air gap thickness	2
Back plate length	500
Back plate width	500
Back plate thickness	17

3. Simulation Using COMSOL Multiphysics

The physics chosen in COMSOL Multiphysics for this work is Solid Mechanics, Electrostatics and Moving Mesh. The MCM works like a parallel plate capacitor.

The capacitance of the parallel-plate capacitor is a function of the distance between the two plates (d), the area of plate (A) and dielectric constant (K) of the dielectric which fills the space between the plates:

$$C = \frac{\varepsilon K A}{d} \qquad (1)$$

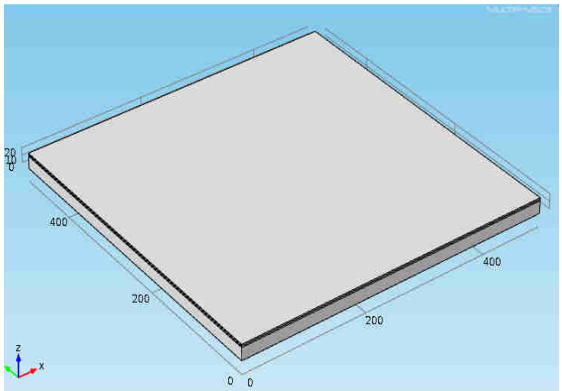

(a)

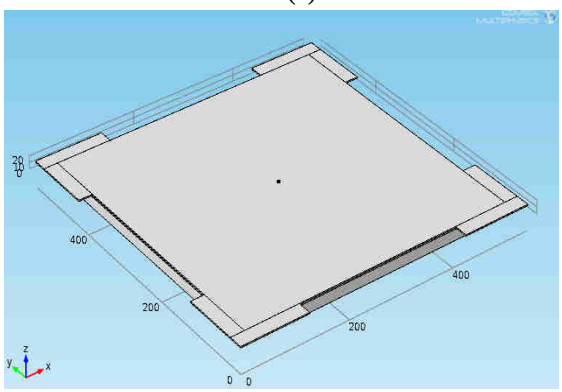

(b)

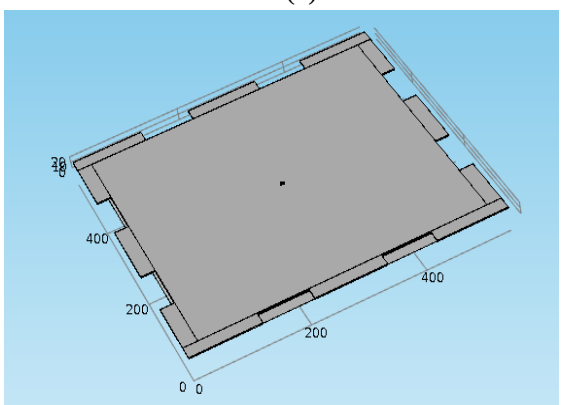

(c)

Fig. 2 Simulation Setup For Square (A) Clamped, (B) 4 Slotted And (C) 8 Slotted Diaphragms.

First Polysilicon was taken as material for diaphragm and simulation was done. The Young's Modulus and Poisson's ratio of poly silicon are 169 GPa and 0.22 respectively. Then the diaphragm was fabricated with Polyimide, with Young's Modulus and Poisson's ratio of 3.1 GPa and 0.34 respectively.
In recent works polyimide material was widely used as diaphragm membrane material [7]. It has good mechanical and thermal stability up to 450°C. It has good adherence with deposited material and epoxy bonding. It is best choice for biomedical application due to biocompatibility and provides high sensitivity.

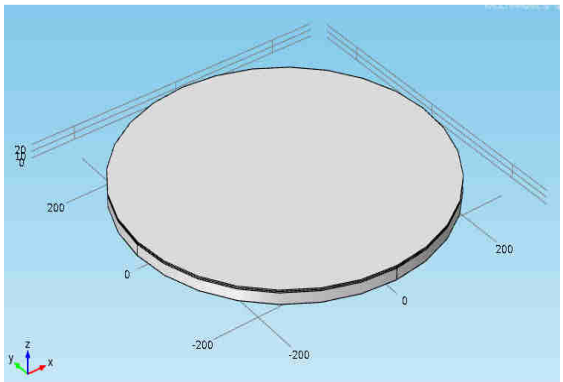

(a)

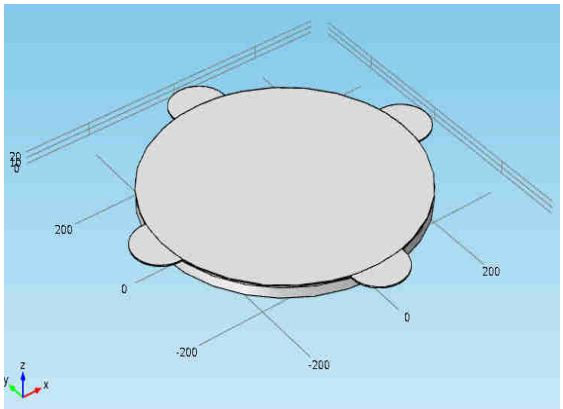

(b)

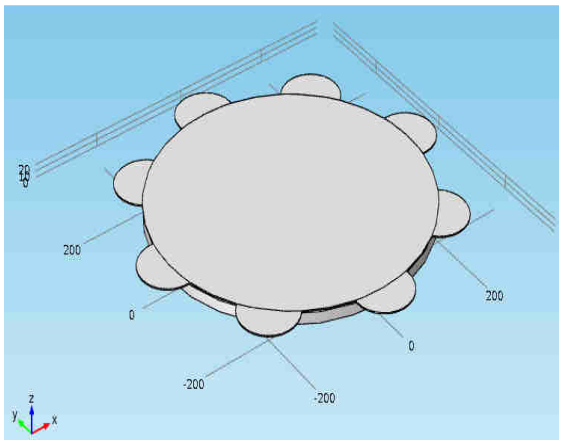

(c)

Fig. 3 Simulation Setup for Circular (A) Clamped, (B) 4 Slotted And (C) 8 Slotted Diaphragms

Based on simulation results, it is found that Polyimide gives better performance. Then square diaphragm and circular diaphragm with clamped edges were simulated. Then simulation was done for 8 and 4 slotted edge square diaphragm. The slot has length of 125µm length, width of 25µm and thickness of 2µm.

4. Results and Discussions

The diaphragm was investigated with applied pressure from 0 to 200 Pa, which is well within audible range. The normalized change in capacitance ($\Delta C/C_0$) was found for all different cases using simulation results. The capacitance sensitivity (S_c) of diaphragm is measured using (2) [8]:

$$S_c = \frac{\Delta C}{C_0 \Delta P} \qquad (2)$$

where, ΔC is change in capacitance in between parallel plates, C_0 is capacitance when pressure is not applied and ΔP is change in applied pressure.

4.1 Polyimide vs. Polysilicon as Diaphragm Materials
The diaphragm is fabricated firstly with Polysilicon and secondly with Polyimide and their performance is compared with respect to normalized change in capacitance vs pressure applied.

Table 2. Comparison of Polysilicon and Polyimide Diaphragms

Material of Diaphragm	Capacitance Sensitivity (10^{-6} (1/Pa) at 200 Pa.)
Polyimide	8.22
Polysilicon	5.93

With Polyimide material, capacitive sensitivity is increased by 1.38. Polyimide as proposed biomedical compatible material shows better performance than Polysilicon.

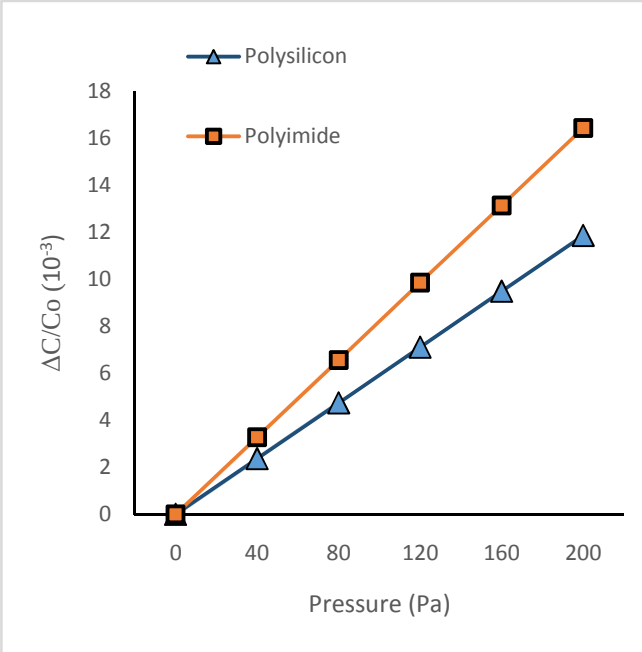

Fig. 4 Normalized Change in Capacitance vs Pressure Plot for Polysilicon and Polyimide

4.2 Polyimide Diaphragm with different shapes

Now the clamped Polyimide diaphragm is replaced by cutting slots into the diaphragm in order to increase the sensitivity of capacitive sensor. Addition of slots will reduce the effect of residual stress and stiffness of the diaphragm and make the sensor more sensitive for measuring pressure. It was found that diaphragm with 4 slots i.e. corner supported diaphragm gave highest capacitive sensitivity than clamped and 8 slotted diaphragms. The circular diaphragm clamped at all edges gives better capacitive sensitivity than square diaphragm clamped at all edges. Since the circumference of square is more than circle of same area, the highest stress levels are away from centre in square as compared to circle. So, among all the designs with square and circular diaphragm and with clamped and slotted edges, square diaphragm with 4 slots is giving better capacitive sensitivity.

Instead of using square diaphragm, a circular shaped diaphragm of same area (i.e. radius of 281.2 µm) as that of square diaphragm is designed with clamped, 4 slotted and 8 slotted edges.

The comparison of clamped and slotted diaphragms with square and circular shapes in terms capacitance sensitivity (S_c) with applied pressure from 0-100 Pa is shown in Table 3.

Table 3. Comparison of Square and Circular Polyimide Diaphragm

	Parameter	Capacitive Sensitivity (10^{-6} (1/Pa) at 200 Pa.)
Square	Clamped Edge	8.22
	4 Slotted Edge	17.28
	8 Slotted Edge	16.76
Circular	Clamped edge	8.43
	4 Slotted Edge	8.82
	8 Slotted Edge	8.54

The normalized change in capacitance with respect to applied pressure for square clamped and slotted diaphragm is shown in Figure 5. It can be observed that the slope of capacitance change for 4 slotted square diaphragm is steeper as compared to other designs and hence maximum capacitance sensitivity of 17.28×10^{-6}1/Pa was obtained. According to Figure 5 and Table 3, it is reported that 4 slotted edge diaphragm gives optimum performance as compared to other designs.

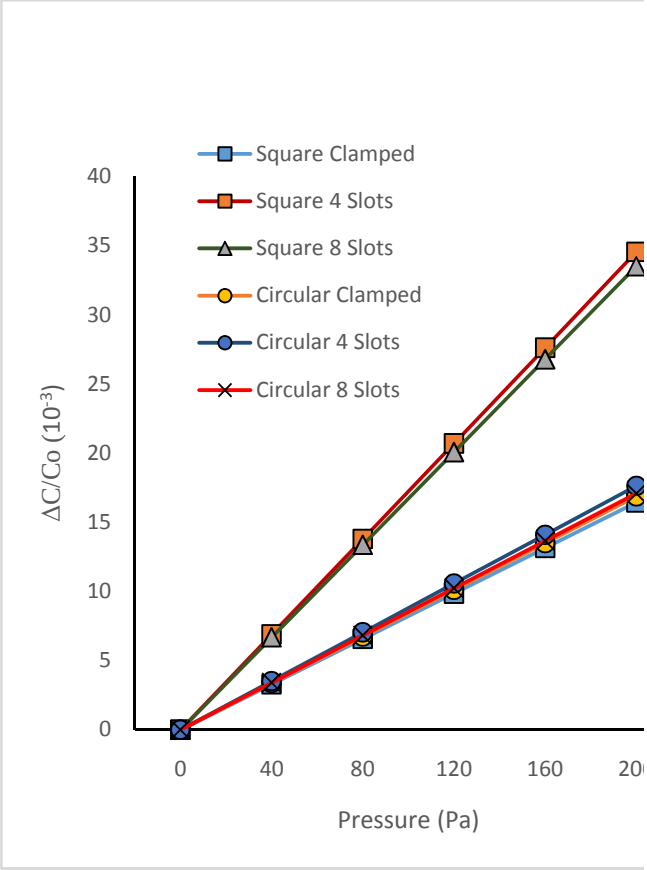

Fig. 5 Normalized Change In Capacitance vs Pressure Plot For Different Diaphragm Structures

5. Conclusion

The MEMS Capacitive Microphone designed in this work has been simulated using COMSOL Multiphysics. The measurement has been carried out for two different materials namely Polysilicon and Polyimide. Polysilicon is widely used for micromaching processes. Polyimide has been found to be more biocompatible and hence more suitable for BioMEMS applications. With polyimide the capacitive sensitivity has increased by 1.38 times. So using Polyimide gives us better results too. Structural changes were made in diaphragm by cutting slots in diaphragm edges and 4 slotted diaphragm is found to be giving best results and hence most preferable for our application.

References

[1] http://www.ashrayakruti.org/about-us/statistics-need/

[2] A.M. Engebreston., "Benefits of digital hearing Aid", Engineering in Medicine and Biology Magazine IEEE, vol 13, issue 2, pp. 238-248, 1994. [3] K. D. Wise , P. T. Bhatti , J Wang, C. R. Friedrich,"High-density cochlear implants with position sensing and control", Elsevier Journal Hearing Research, pp 2230, 2008.

[4] G.K. Girish, V.S. Nagaraja, "Design of MEMS Based Polymer Microphone for Hearing Aid Application," COMSOL Conference Bangalore, 2012.

[5] C.H. Huang , C.H. Lee , T.M. Hsieh, L.C. Tsao, S. Wu, J.C. Liou, M.Y.Wang , L.C. Chen , M.C. Yip and W. Fang, "Implementation of the CMOS MEMS Capacitive Microphone with Corrugated Metal Diaphragm and Silicon Back-Plate, "Sensors Journal ISNN 1424-8220, pp 6257-6269, 2011.

[6] Y.C. Hsu, J.Y. Chen, T. Mukherjee , G.K Fedder, "An Optimal design of high performance interface circuit with acoustics transducer model" , Solid State Circuits Conference IEEE Asian, pp. 280- 283, 2007.

[7] P. Eswaran, S. Malarvizhi, "MEMS Capacitive Pressure Sensors: A Review on Recent Development and Prospective, "International Journal of Engineering and Technology (IJET), vol5, no3, 2013.

[8] B. A. Ganji and M. S. Tabarestani, "A novel high sensitive MEMS intraocular capacitive pressure sensor," Springer Journal on Microsystems Technologies, vol.19, no. 2, pp.187-194, Feb 2013.

[9] S. L. Pinjare, V.S. Nagaraj, Savita, S. Kesari, K. R. Roshan, M.S. Sagar ,"A MEMS Condenser Microphone for Consumer Applications," COMSOL Conference Bangalore, 2011.

[10] G. Mishra, N. Paras, A. Arora, P.J.George,"Simulation Of MEMS Based Capacitive Pressure Sensor Using COMSOL Multiphysics," International Journal of Applied Engineering Research, vol.7 no.11, 2012.